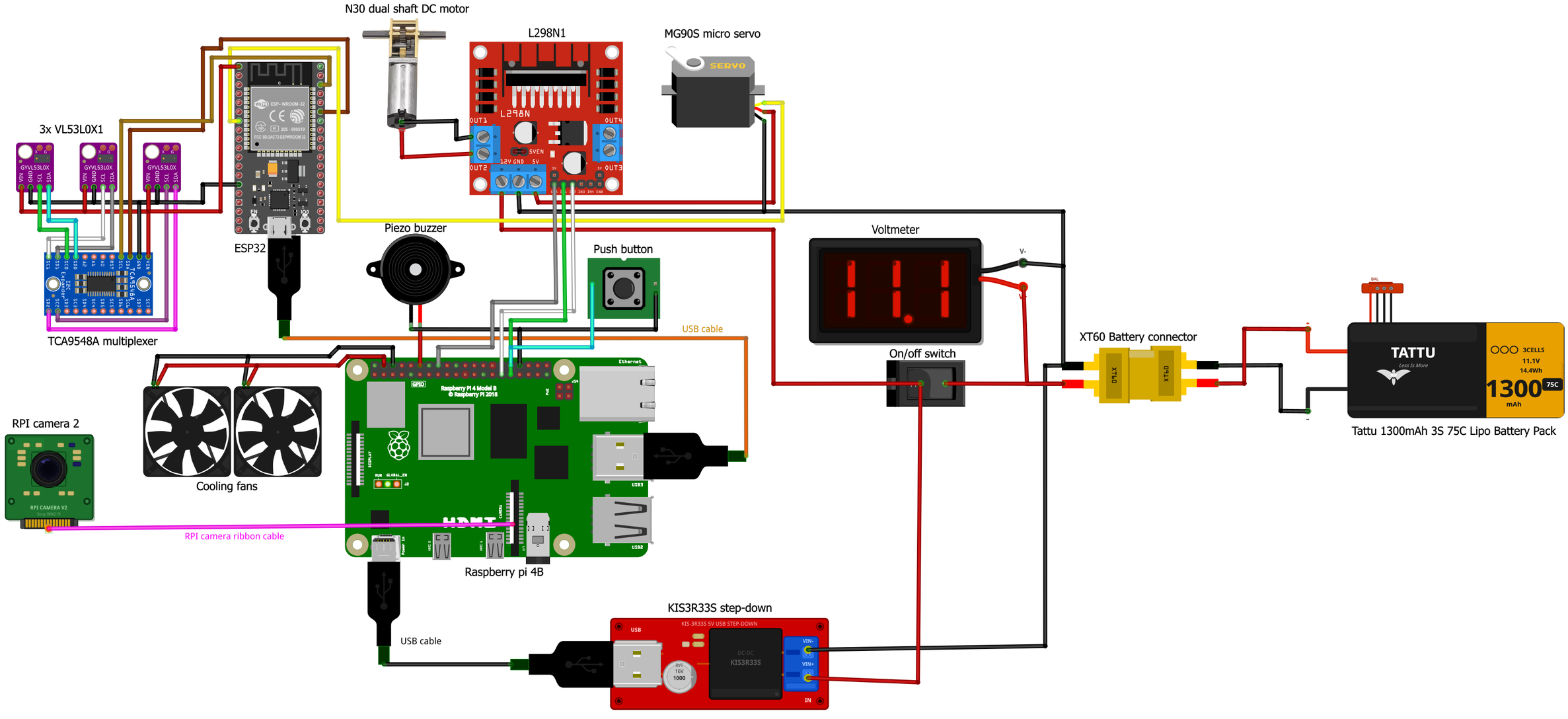
N30 dual shaft DC motor
L298N1
MG90S micro servo
3x VL53L0X1
ESP32
Piezo buzzer
Push button
Voltmeter
USB cable
XT60 Battery connector
On/off switch
Tattu 1300mAh 3S 75C Lipo Battery Pack
TCA9548A multiplexer
Cooling fans
RPI camera 2
RPI camera ribbon cable
Raspberry pi 4B
USB cable
KIS3R33S step-down